Brooksvale Woods

By: CT Yankee Construction, Inc.

Cheshire

Project Manager:
Lori Watts
203-272-1821 Ext. 339

Calcagni
ASSOCIATES
REAL ESTATE

www.calcagni.com

330 SOUTH MAIN STREET, CHESHIRE, CT 06410 PHONE: 203-272-1821
2620 WHITNEY AVENUE, HAMDEN, CT 06518 PHONE: 203-288-1821
924 NORTH MAIN STREET EXT., WALLINGFORD, CT 06492 PHONE: 203-265-1821

Brooksvale Woods

By: CT Yankee Construction, Inc.

Cheshire

Lots 1 & 2

CHASE MODEL

$429,900

4 Bedrooms

Total 2,087 Sq. Ft.

First Floor

Second Floor

Calcagni ASSOCIATES REAL ESTATE

The rendering and floor plans substantially represent the model depicted. Contractor reserves the right to alter dimensions slightly provided the financial and structural integrity of the building are not impaired. House plans are the property of Ct Yankee Construction, Inc. All rights reserved. 2010

330 SOUTH MAIN STREET, CHESHIRE, CT 06410 PH: 203-272-1821 FX: 203-271-3585

Brooksvale Woods

By: CT Yankee Construction, Inc.

SPECIFICATIONS

Lots 1 & 2

UTILITIES
- City water, septic
- Underground utilities, including cable TV & telephone

CABINETRY AND COUNTERTOPS
- Custom kitchen and bathroom cabinetry, from builder's selection
- Bathroom vanities with cultured marble tops and integrated sinks, from builder's selection
- Granite countertops in kitchen from builder's selection.

PLUMBING & HEATING
- Propane FWA with central air, 2 zones.
- 50-gallon electric hot water
- Kitchen sink, stainless steel under-mount single bowl, w/Moen single lever faucet
- Fiberglass shower in Master Bath
- White fiberglass tub & shower in Main Bath
- White toilets in all bathrooms
- Washer & dryer hookups
- Water lines Flo-Guard, waste PVC
- Pedestal sink in powder room.

ELECTRICAL
- Electric outlets & switches per code
- 200 AMP service
- Lighting fixtures-$600 allowance
- 4 cable TV outlets
- 4 modular phone jacks
- Ceiling outlets for future electric garage door openers
- 4 recessed lights
- Exhaust fans in all bathrooms

STRUCTURAL
- Construction pursuant to local building code
- Footing & foundation- poured concrete
- 9' foundation walls
- Basement & garage floor- poured concrete

STRUCTURAL (CON'T)
- Insulation 3 ½" R 13 wall, 12" R-38 attic blown, R-11 basement ceiling
- Footing drains
- Attic scuttle in master bedroom walk-in closet
- Bilco hatchway or walk-out basement, depending on grade

LANDSCAPING
- Lawn-graded & seeded front, sides & 25' rear
- Concrete front walk, driveway to front door
- 8 shrubs
- Driveway- processed stone

EXTERIOR DECORATING
- Siding-vinyl
- Windows (screens & grids included), energy star
- Roof- asphalt/fiberglass shingle- architectural design, 30 yr. with ridge vent*
- Leaders & gutters- aluminum
- Insulated garage door
- Trim- maintenance free
- Deck- 12'x12' pressure treated or concrete patio 12'x12', depending on grade

INTERIOR FEATURES
- Ceiling- flat finish
- Walls- Benjamin Moore-2 coats- painted one color throughout *
- Woodwork- painted-satin finish
- Doors- 6 panel molded, painted
- Ceramic tile floors- Baths, Laundry Room & Kitchen
- Hardwood floors- Dining Room, Living Room and Kitchen
- Carpet- all bedrooms/study and upstairs hall
- Clothes closets-white wire shelving
- Vanity mirrors- plate glass sized as vanity, Master Bath and Main Bath only
- Tyvec wrap on exterior

Features and specifications are subject to change. Seller may substitute equal or better quality materials.

Calcagni ASSOCIATES REAL ESTATE

Updated 11/16/10

Brooksvale Woods

By: CT Yankee Construction, Inc.

Cheshire

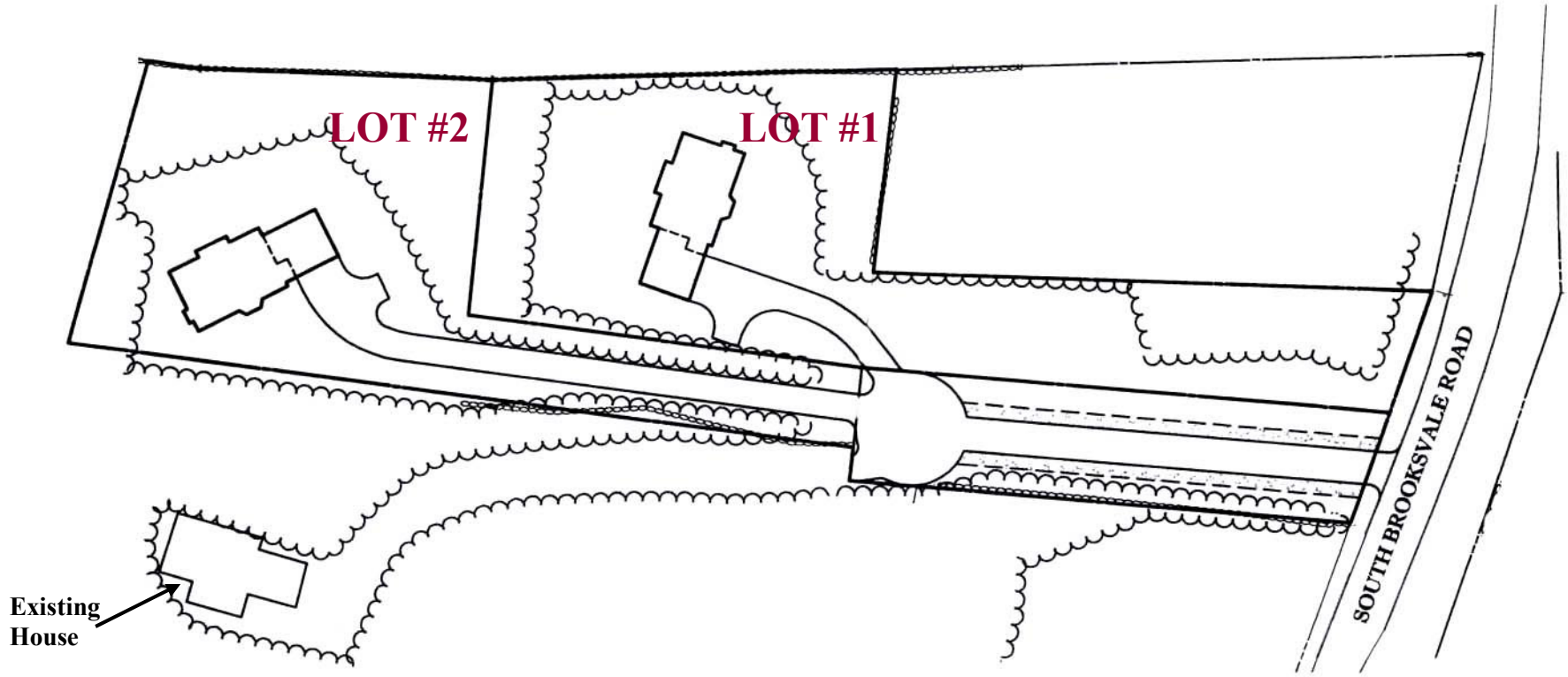

DIRECTIONS:
South Main Street to
South Brooksvale Road

calcagni.com/brooksvalewoods

Calcagni
ASSOCIATES
REAL ESTATE